THIS DRAWING IS THE PROPERTY OF VOLVO PENTA CORPORATION. REPRODUCTION OR DISCLOSURE TO THIRD PARTIES IS PROHIBITED WITHOUT WRITTEN PERMISSION OF VOLVO PENTA CORPORATION. "CAD" DO NOT SCALE

- Ⓐ OIL FILTER, ENGINE
- Ⓑ PCV VALVE AND OIL FILL, ENGINE
- Ⓒ OIL PAN DRAIN PLUG
- Ⓓ OIL DRAIN AND DIPSTICK, ENGINE OIL LEVEL GAGE
- Ⓔ WATER DRAIN
- Ⓕ LIFTING DEVICE
- Ⓖ FUEL PUMP CONNECTION, 1/4" NPT
- Ⓗ
- Ⓘ MECHANICAL FUEL PUMP
- Ⓙ THROTTLE CABLE SINGLE
- Ⓚ WATER COOLED EXHAUST PIPE FOR HOSE I.D. 98,4 [3 7/8"]
- Ⓛ STARTER MOTOR
- Ⓜ MANUAL RESET BREAKER & FUSE
- Ⓝ ELECTRICAL CONNECTION ENGINE - INSTRUMENT PANEL
- Ⓞ
- Ⓟ OIL FILL AND DIPSTICK, STEERING
- Ⓡ STEERING CABLE
- Ⓢ WATER INTAKE
- Ⓣ OIL FILL, OUTBOARD UNIT
- Ⓤ OIL DRAIN, OUTBOARD UNIT
- Ⓥ OIL DIPSTICK, OUTBOARD UNIT
- Ⓧ SEE INSTALLATION INSTRUCTIONS
- Ⓩ ENGINE FLUSH
- ⒶⒶ EXHAUST OVERHEAT SWITCH

NOTE: ENGINE ALARM - IN SMALL PARTS KIT

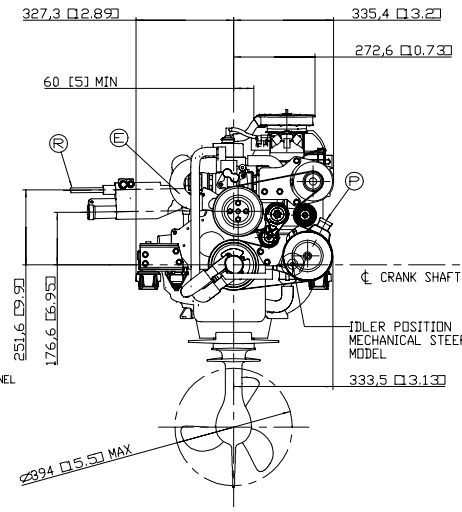

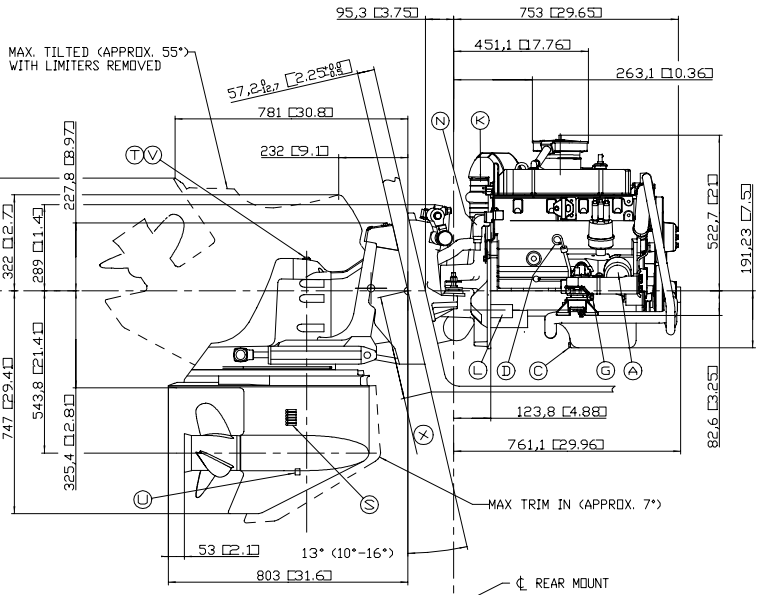

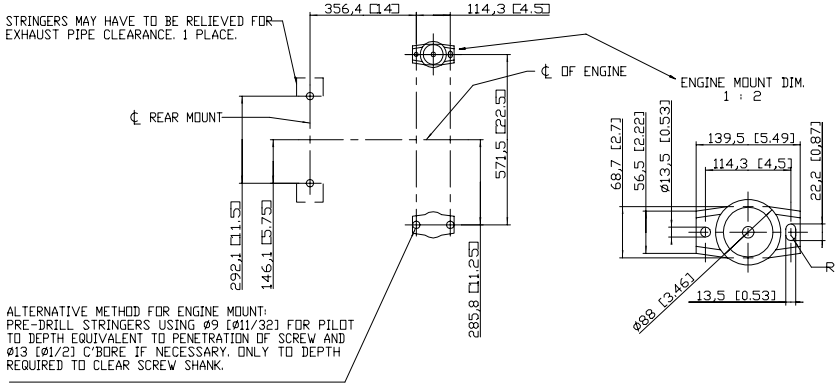

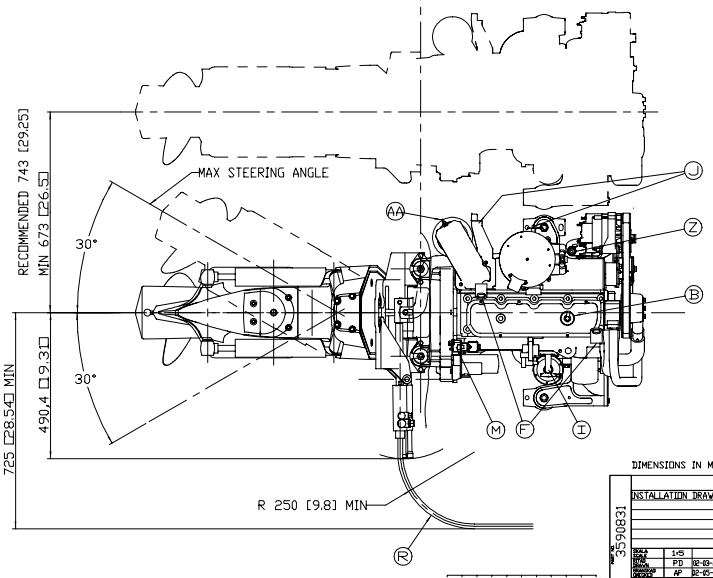

DIMENSIONS IN MILLIMETERS AND IN [ ] INCHES

VOLVO PENTA			
INSTALLATION DRAWING			
			PROJ.
SCALE 1:5	TYPE	3.0 GL / SX	
DRAWN PB 92-02-21			
CHECKED AP 92-05-04	DRAWING NO.	3590831	REV. 01
APPROVED RV 92-05-12			
3590831			