- (A) OIL FILTER, ENGINE
- (B) OIL FILL, ENGINE
- (C) OIL DRAIN, ENGINE
- (D) OIL DIPSTICK, ENGINE
- (E) WATER DRAIN
- (F) LIFTING DEVICE
- (G) FUEL PUMP CONNECTION, I.D. 6.35 [1/4] NPT
- (H) FUEL FILTER
- (I) ELECTRICAL FUEL PUMP
- (J) THROTTLE CABLE SINGLE
- (K) WATER COOLED EXHAUST PIPE FOR HOSE I.D. 98,4 [3 7/8]
- (L) STARTER MOTOR
- (M) FUSE PANEL
- (N) ELECTRICAL CONNECTION ENGINE - INSTRUMENT PANEL
- (O) CIRCUT BREAKER FOR TRIM PUMP
- (P) OIL FILL AND DIPSTICK, STEERING
- (R) STEERING CABLE
- (S) WATER INTAKE
- (T) OIL FILL, OUTBOARD UNIT
- (U) OIL DRAIN, OUTBOARD UNIT
- (V) OIL DIPSTICK, OUTBOARD UNIT
- (X) SEE INSTALLATION INSTRUCTIONS
- (Z) ENGINE FLUSH
- (AA) EXHAUST OVERHEAT SWITCH

NOTE: ENGINE ALARM IN SMALL PARTS KIT

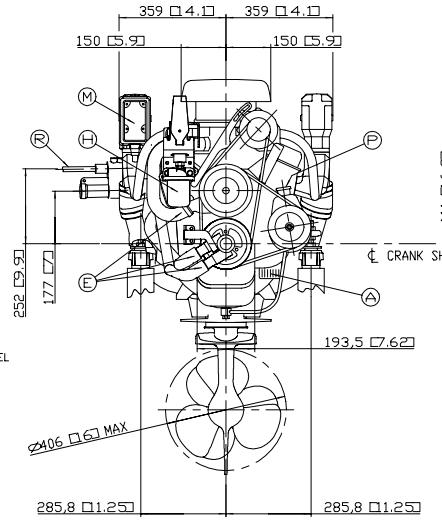

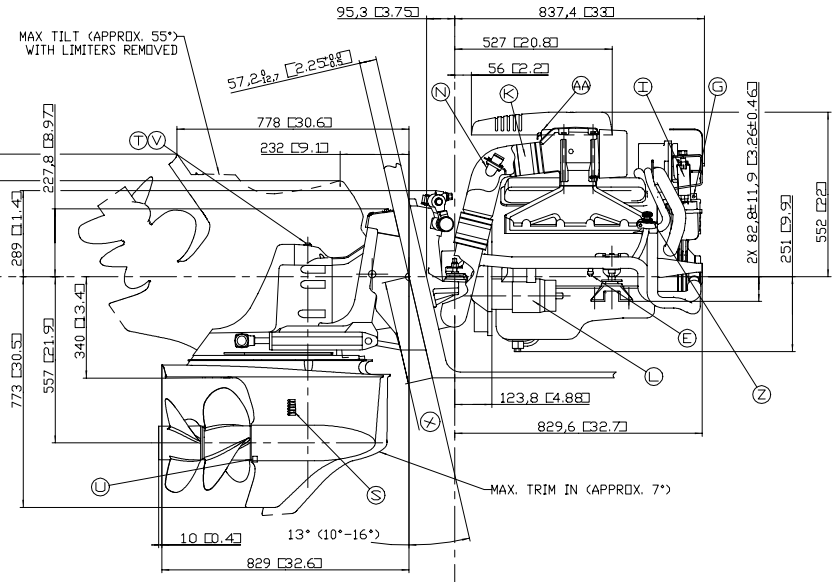

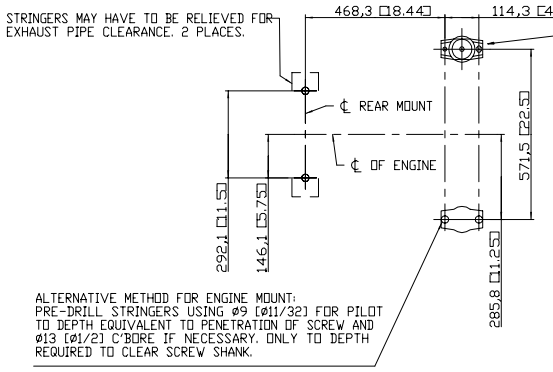

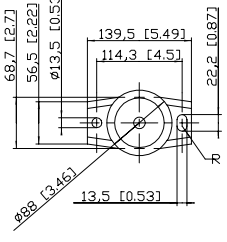

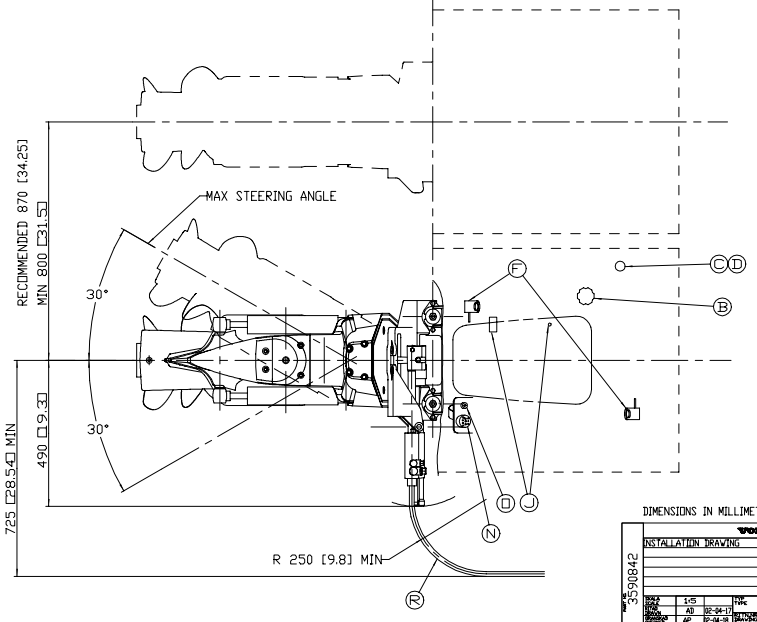

DIMENSIONS IN MILLIMETERS AND IN [ ] INCHES

VOLVO PENTA

INSTALLATION DRAWING

DRAWN	AD	02-04-17	TYPE 5.0 GL & 5.7 GL / DPS
CHECKED	AP	02-04-22	DRAWING NO 3590842
APPROVED	R.W	02-04-18	SHEET 01

PART NO 3590842

PROJ.

SCALE 1:5

0 10 20 30 40 50 60 70 80 90 100